Muhammad E Hasan
Summer '02 Research Report
9/19/02

ABSTRACT

Starting in early June of 2002, my objective for this research experience was to learn more about scientific research and get a hands-on experience in the fields of Physics and Chemistry. In the beginning I worked on Sodium Iodide detectors during which I was responsible for setting them up and tuning them to an optimum setting. A lot of data was collected from these detectors over a period of about two weeks to determine the fluctuations and irregularities in the setup. Although I worked with these detectors, the majority of my time was focused towards the AMS (Accelerated mass spectrometry) which was eventually carried out at PRIME labs, Purdue University. I worked with Dr. Carry Reed for the preparation of Aluminum Boride to be used for AMS in future testing. I prepared various samples for testing at PRIME lab. After that at the end of summer we spent two days testing our samples at PRIME Labs. Data collected at PRIME lab was sufficient and helped us in drawing some conclusion as described in the report.

DETAILS

While AMS was the focus of this research project there was a significant amount of time spent preparing and studying the many different possibilities for testing different material for AMS. From all the work done this summer, I can classify my research into the following parts

- Collection of data to Calibrate Sodium Iodide detectors
- Aluminum Boride; Preparation & use
- Preparation of samples for AMS
- AMS testing at PRIME labs & Extraction of data

COLLECTION OF DATA TO CALIBRATE SODIUM IODIDE DETECTORS

There are four Sodium Iodide detectors setup in 204A Holt as shown in Fig. 1 below. Two of them are 5" detectors (Detector C & D) while the other two are 3" detectors (Detector A & B). Detector A and B are both set at 7 cm away from the sample as show in fig. 1.Each of the detector was connected to a High Voltage of 1000V. The signal wire was connected to an amplifier. A multiple channel amplifier device which was connected to the computer for recording data.

My objective with these detectors was to determine their stability and its optimal running conditions. For this I used two radioactive samples of Na-22; a high radioactivity and a low radioactivity sample. I used the fact that the energy emitted by Na-22 is 511KeV. Therefore the basic idea was to setup the apparatus in such a manner that every time I test one of these samples the first peak of the graph should be a 511KeV energy peak as shown in the Graph. 1 Below.

This (Graph.1) is a graph between the number of counts and energies. As we can see from the graph below that the peak of this graph is 507.5 KeV which depicts that this is pretty close to 511KeV. I was able to adjust the settings on the amplifier to shift this graph so that it showed the correct reading. The most major problem I encountered was the fluctuation of the High Voltage and amplifiers which dramatically changed the readings over a particular period of time.

This compelled me to carry out fluctuation tests and figure out if any of the components being used was defective. It turned out that one of the amplifiers was defected and was replaced. However this did not completely resolve the issue of variation in readings. Hence we have to process the data to find out for how much time any one setting would remain stable.

Another advantage of collecting this data was to calculate the efficiency of these detectors.

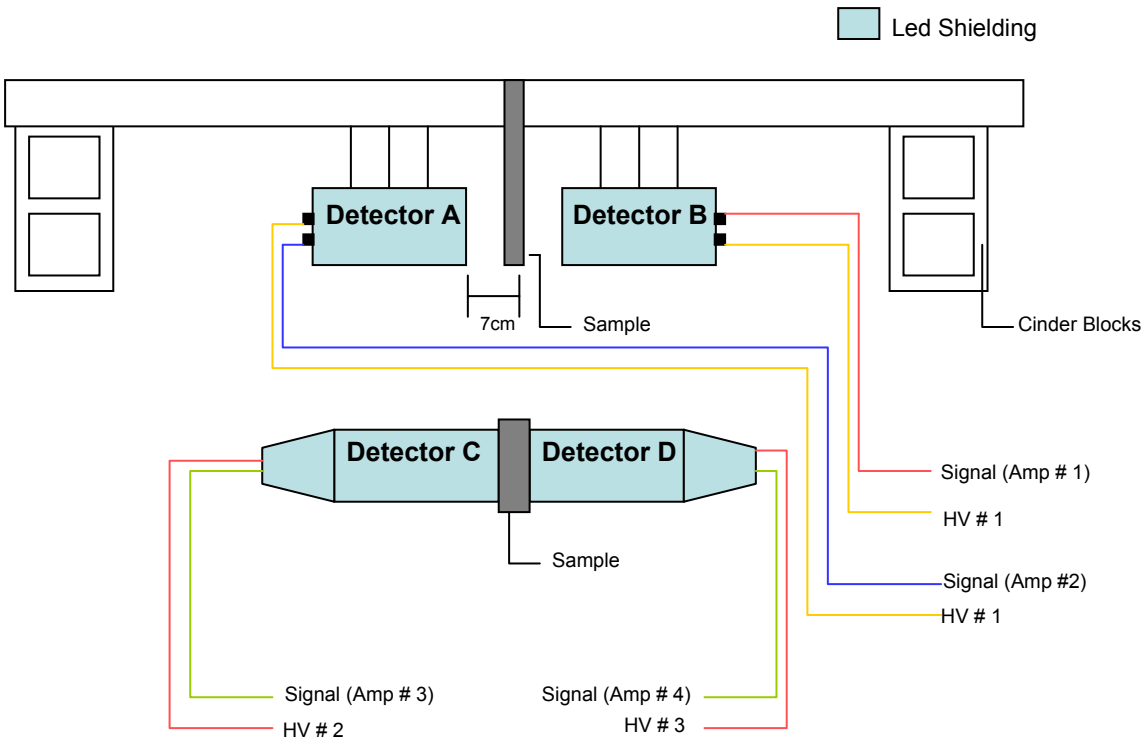

Figure. 1

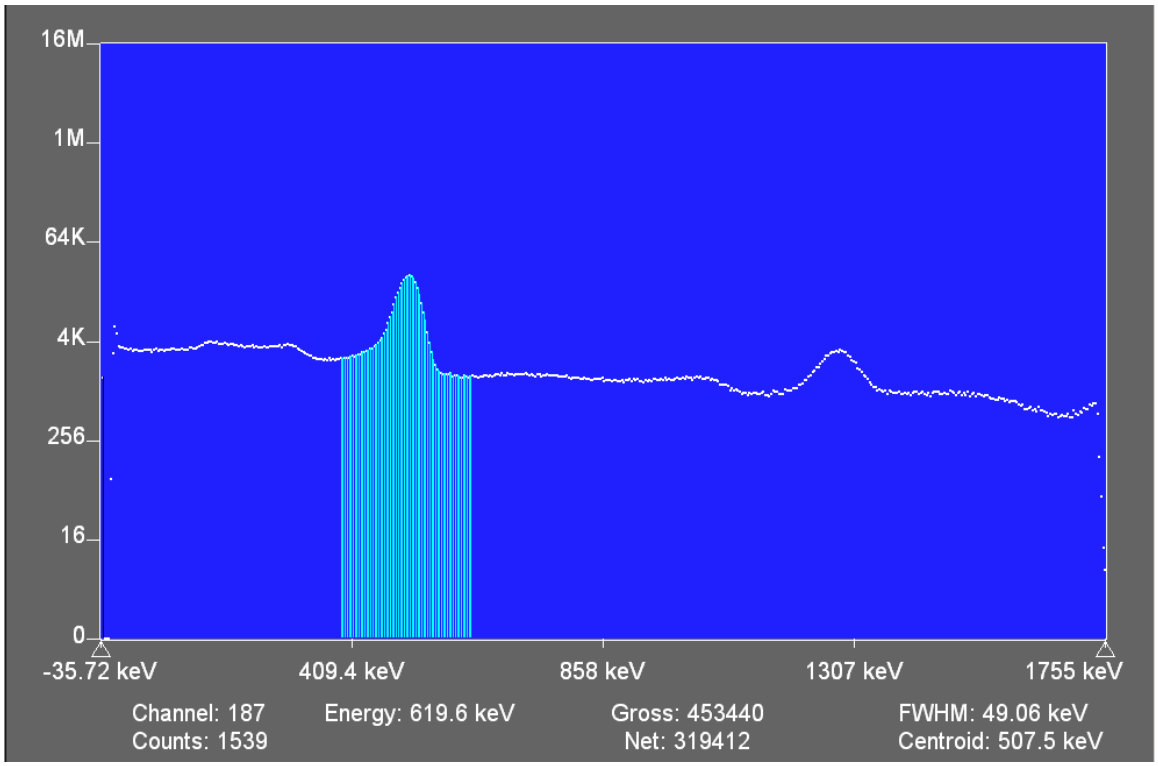

Graph. 1

ALUMINUM BORIDE; PREPARATION & USE

Aluminum Boride was one of the compounds in the spotlight this summer for AMS testing. The prediction was that due to the properties of the compound it should perform well for AMS. For general testing, an effective method of production of this compound in the lab was necessary due to a lack of industrial preparation of this compound. The method was proposed by Dr. Carey Reed which was based on an experiment conducted by a few chemists in 1954.

This was multiple step process in which Aluminum Boro-hydride was prepared first. This was the only step we accomplished this summer. This step was based on the following chemical reaction.

$$3NaBH_4 + AlCl_3 \rightarrow Al(BH_4)_3 + 3NaCl$$

Since most of the chemicals used were sensitive to air, the experiment was conducted in a sealed vacuum line. The compounds were prepared in a Nitrogen gas glove bag, where they were carefully weighed and mixed. Then the mixture was added to the reaction flask heated at approximately 100° C. The Aluminum Boro hydride was separated from the product by a process called 'Fractional distillation'.

In fractional distillation the compounds were heated to a high temperature and then passed through low temperature traps to separate different compounds. The traps used were basically as follows; (1) Liquid Nitrogen, (2) Ethanol solution and (3) Dry ice. We were successful in producing a very small amount of Aluminum boro hydride. Unfortunately, this experiment did not yield significant results and was not completed to produce Aluminum bororide.

Most of this experiment was carried out in Dr. Carey Reed's lab in the Science building. During this process besides preparation of AlB2, I learned many lab skills such as producing dry ice, using a glove bag, glass bending and working with other chemistry equipment.

PREPARATION OF SAMPLES FOR AMS

For our trip to Purdue University, we had to 'pack' all the samples we were going to test. Packing of samples basically means tightly putting small amounts of the sample in a small cylindrical capsule which fits into the particle accelerator. I used metal drill blanks and hammer to tightly pack in the samples as shown in figure. 2. This was done very meticulously to keep contamination at the minimum level. I had to prepare about fifty samples among which most of them were packed in a glove bag filled with nitrogen gas. Following are the samples which were stored.

Serial #	Substance Used	Stored in
47200	Aluminum Nitride (AlN)	Nitrogen gas bottle
47207	Aluminum Boride (AlB2)	Nitrogen gas bottle
47216	AlN+ Ag	Nitrogen gas bottle
47219	AlB2 + Ag	Nitrogen gas bottle
47220	Aluminum Nitride (AlN)	Air
47224	Aluminum Boride (AlB2)	Air
47228	Aluminum Nitride (AlN)	Air

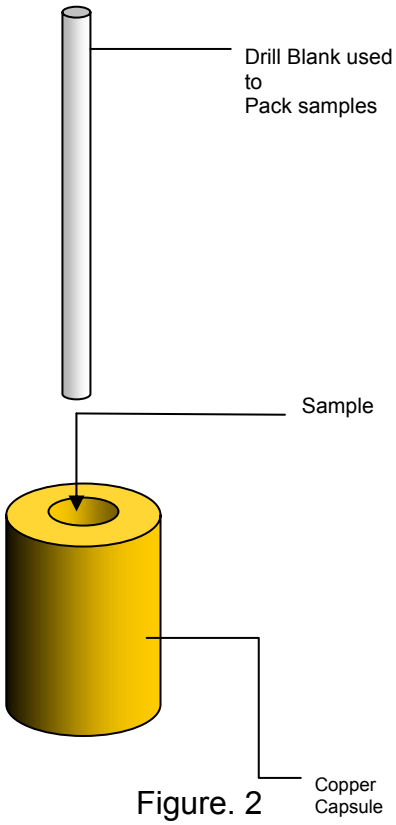

Figure. 2

While packing the samples the most perceptible problem I faced was contamination of the samples which were packed under nitrogen gas. This problem was effectively solved by using glove bags filled with nitrogen gas. Many of the samples were packed in the glove bag and then stored in the small glass vials. All fifty of the samples had various combinations of the

substance we wanted to test at the PRIME labs. The basic variations of how the samples were stored were:

1. How long have they been exposed to air
2. Where have they been packed i.e. in air or glove bag under Nitrogen gas
3. What have the samples been stored in
4. What is the mixture ratio in the compound

All of these samples were carefully labeled and prepared for the trip to PRIME labs.

AMS TESTING AT PRIME LABS & EXTRACTION OF DATA

All the samples were tested over a period of two days at PRIME labs. We tested approximately thirty five different samples including Aluminum Boride, Aluminum Nitride as well as Aluminum Oxide. The results were recorded on a computer.

Processing this raw data turned out to be daunting task but was eventually accomplished on Microsoft Excel. The results were surprising because Aluminum Nitride worked much better than expected whereas the Aluminum Boride failed to produce significantly larger injector current.

Aluminum Oxide normally produces a beam current ranging from 100 – 2000 nA. This is the material presently being used for AMS. The following table 2 illustrates the injector current obtained.

Sample	Injector Currents (nA)		
	start	maximum	average
Oxide	130	140	100
Nitride, exposed to air for 1 hr	300	590	500
Nitride, exposed to air for 24hr	140	480	390
Nitride, exposed to air for >2 yrs	100	440	350
Nitride, no exposure to air (<45 sec)	70	160	100

Table. 2

	Exposure to air	**Start nA**	**at 5 min. nA**	**at 10 min. nA**	**maximum nA**
oxide, 1:2	all	**131**	**123**	**126**	**139**
oxide, 1:3	all	**120**	**105**	**99**	**146**
AlN	none	**71**	**56**	**86**	**158**
AlB2	none	**29**	**54**	**103**	**156**
AlN+Ag	none	**172**	**138**	**175**	**219**
AlB2+Ag	none	**46**	**33**	**34**	**40**
AlN	packing	**297**	**446**	**529**	**586**
AlN	packing, holder	**144**	**267**	**330**	**481**
AlN	24hr, packing, holder	**97**	**250**	**294**	**442**
AlN	24hr, packing	**95**	**106**	**188**	**500**
AlN	all (2yr)	84.6	73.7	202	314
AlN	2yr, packing only	37	101	114	285

Table .3

The results also varied on the fact whether the sample was exposed to air or not. This can be seen clearly by observing the following graphs.

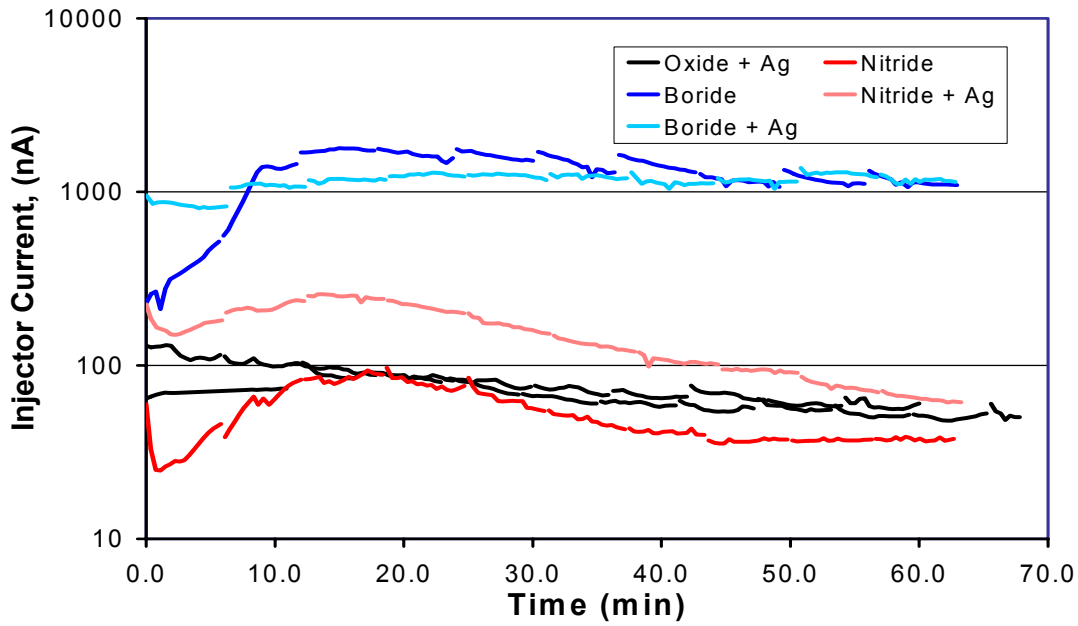

Graph .2 Injector current of samples not exposed to air

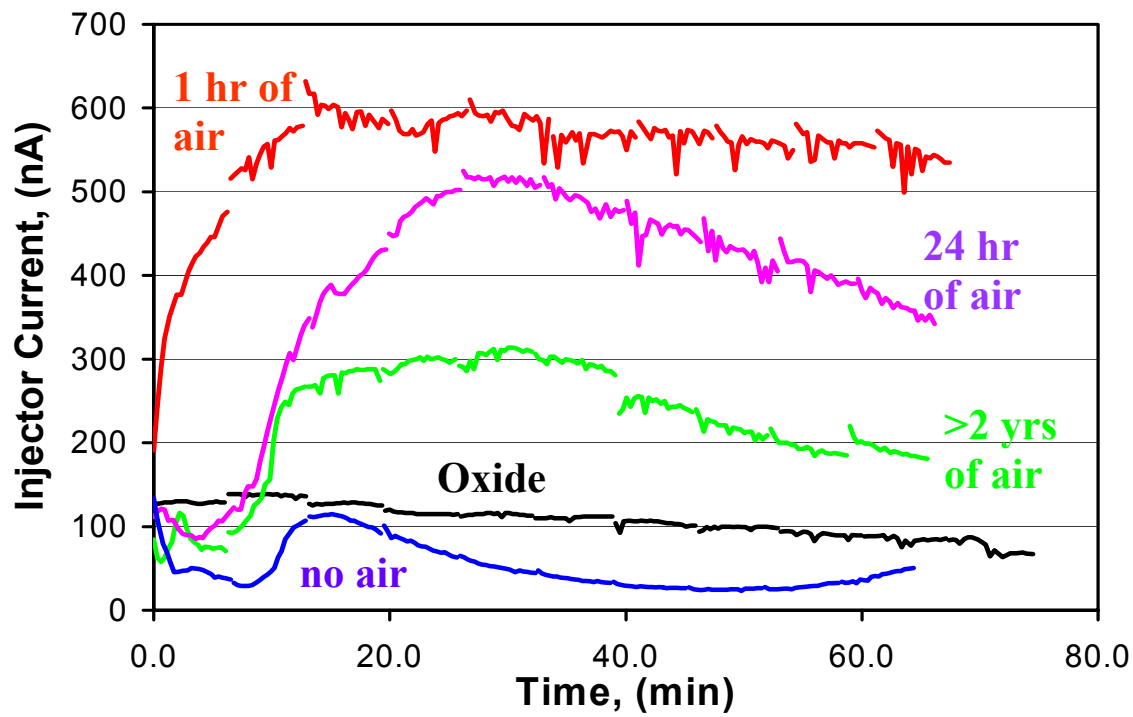

Graph .3 Effects of air contamination on AlN

In conclusion we can say that the AlN and AlB_2 both when compared to the Aluminum oxide performed very well. Graph 3 particularly shows interesting results because it produces a large injector current with small amount of contamination. Hence more research needs to be done for these results to be substantial and significant.